6277	Rev. B

APPLICATION DRAWING

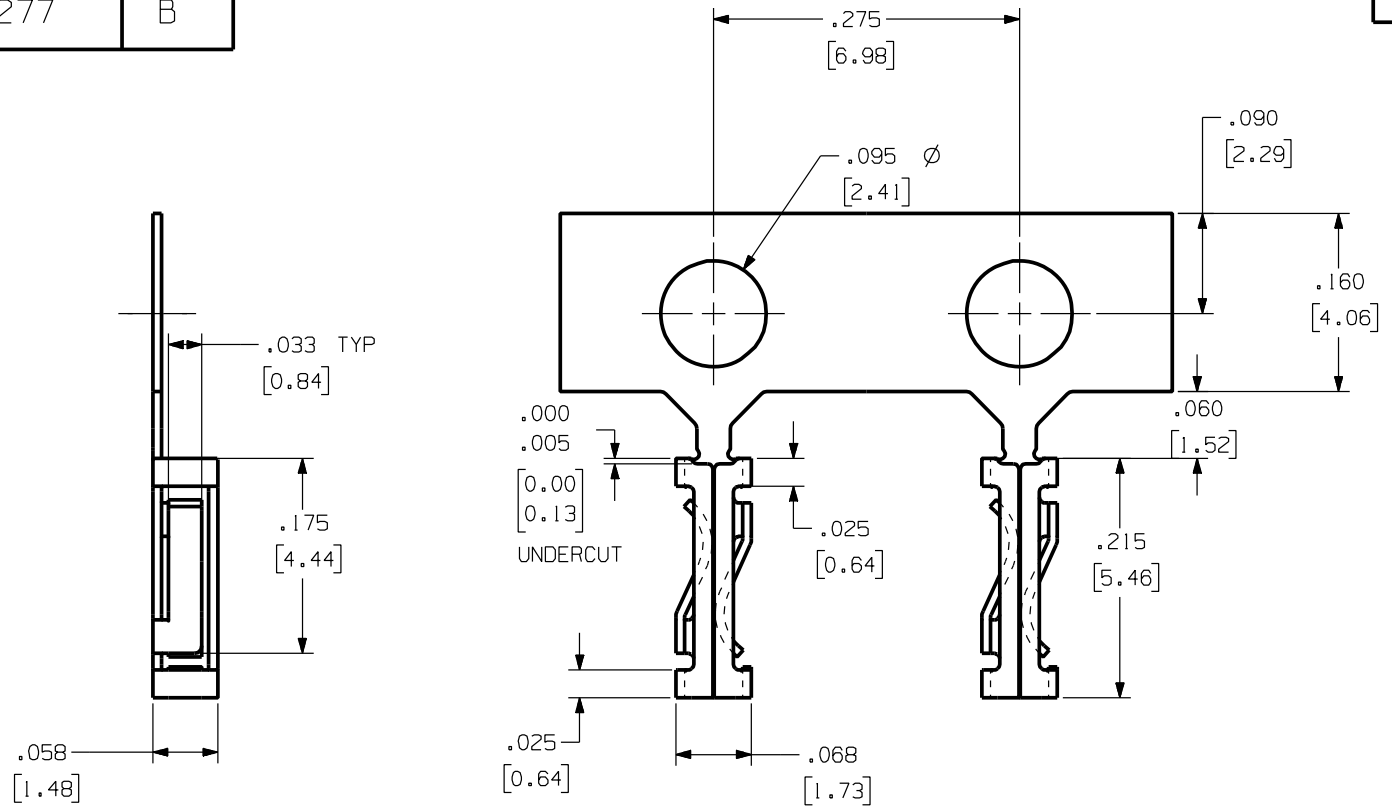

Recommended Solder Pad Geometry

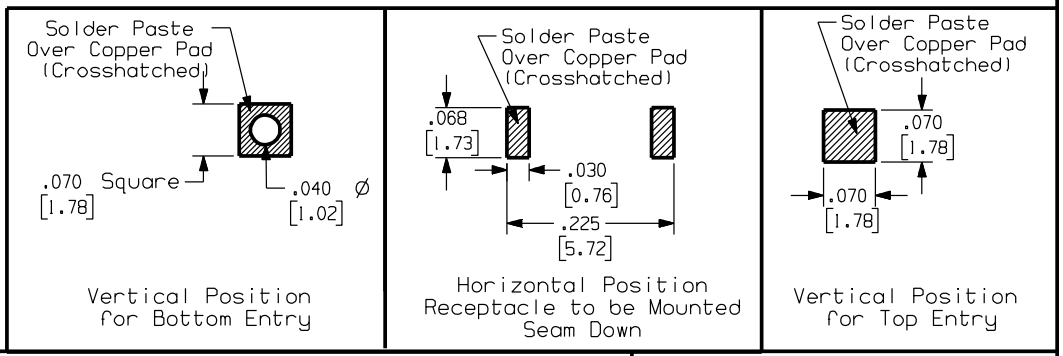

MATERIAL	FINISH
.008 (0.203mm) CDA510 (Phos. Bronze)	100% Tin Over Copper

RoHS COMPLIANT

Zierick Product Related Recommendations are general guidelines only. Since each customer's design, process and application is different it is necessary that customers thoroughly test our products in specific applications.

ZIERICK

Radio Circle Drive
Mount Kisco, New York 10549

SMT BOX RECEPTACLE
(MULTIPLE ENTRY)

THIS DOCUMENT AND THE CONFIDENTIAL INFORMATION CONTAINED HERE ARE THE PROPERTY OF ZIERICK MANUFACTURING CORPORATION AND MAY NOT BE USED IN WHOLE OR IN PART IN ANY WAY, OR COMMUNICATED TO ANY PARTY OTHER THAN THE RECIPIENT WITHOUT THE EXPRESS PRIOR WRITTEN CONSENT OF ZIERICK MANUFACTURING CORPORATION.

6277 B