

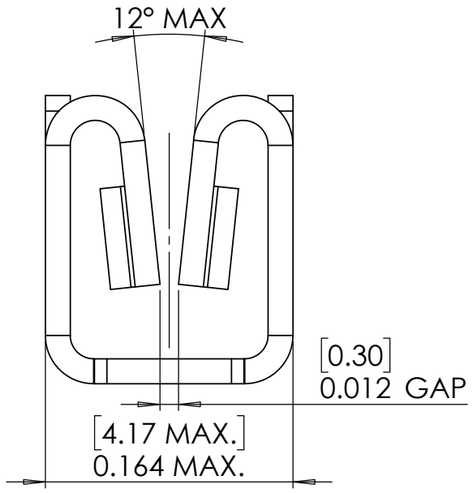

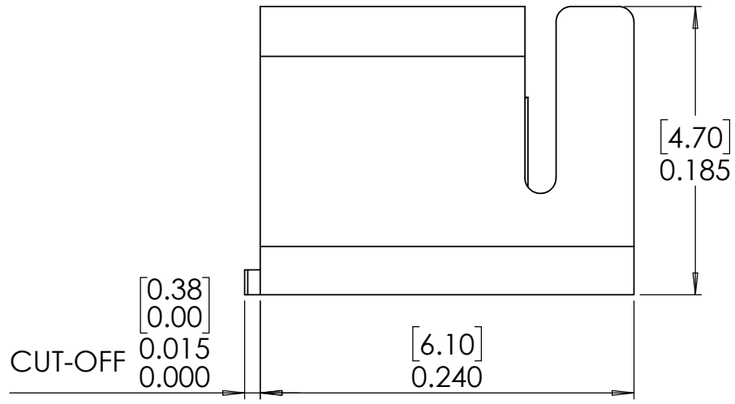

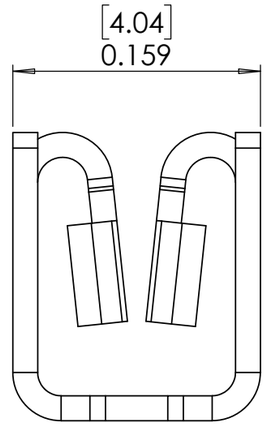

Part Number	Material
1238	.016" (.41mm) Brass
1238HTA	.016" (.41 mm) Corson Alloy

RoHS REACH

CUSTOMER PRINT

DIMENSIONS: in. [mm]

SCALE:10:1

TOLERANCES:
(unless otherwise specified)

.xxx ±.005 [.127]
.xx ±.01[.254]
ANGULAR: ±2°

Zierick product-related recommendations are general guidelines and to be used for reference only. Each customer's design, process, and application is different, so it is necessary that customers test our products in their unique applications.

REV	DESCRIPTION	DRAWN	CHK'D	APPV'D	DATE
0	New print	KTL	JH	POC	10/25

SPEC. DOC.: -

APP. DOC.: -

MATERIAL:
see table

FINISH:
Matte Tin over Copper

TITLE:
Bottom/Side Entry Universal Fuse Receptacle

DRAWING NUMBER:
1238XXX

REVISION:
0

SIZE: A3

SHEET 1 OF 1