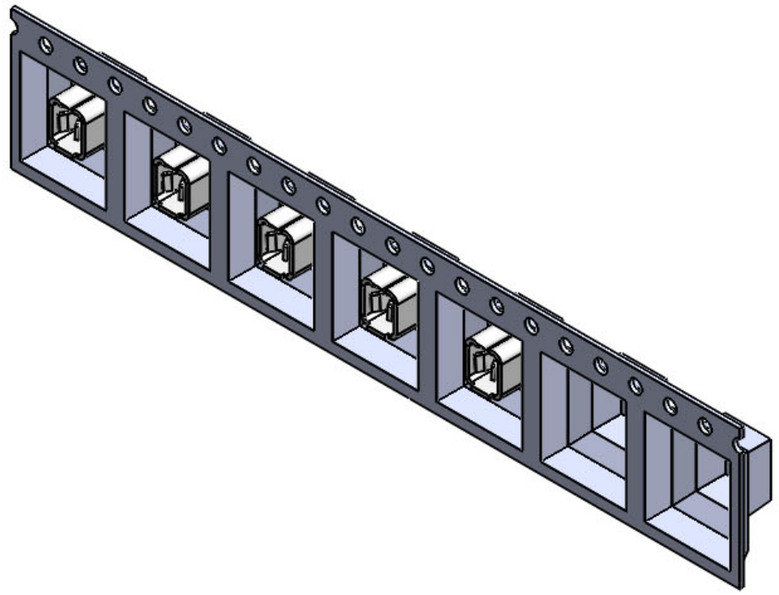

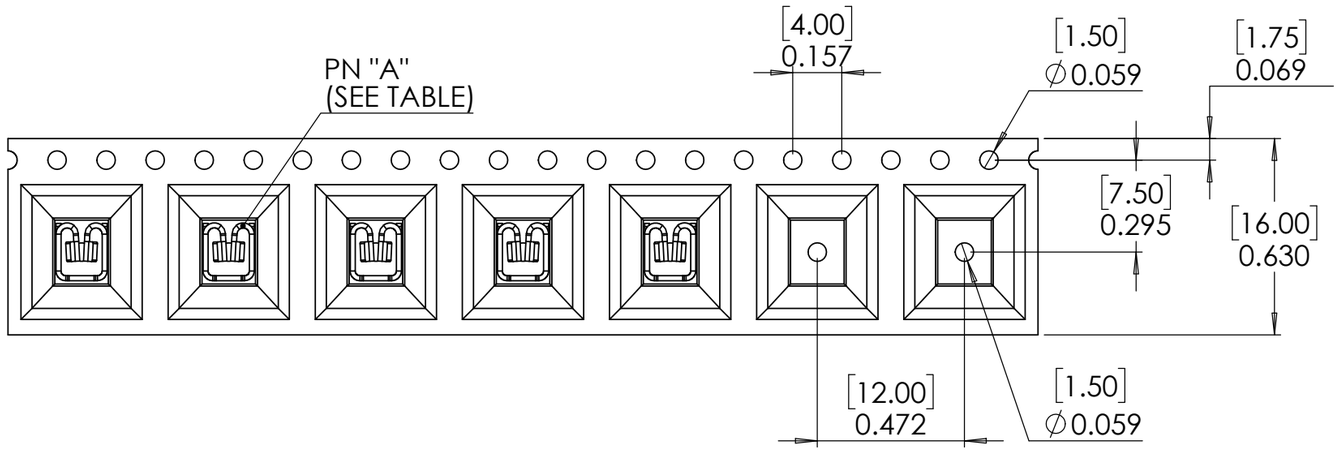

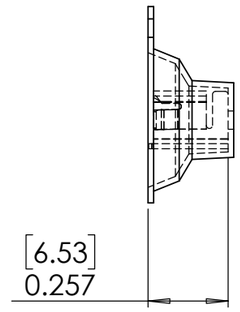

PN	PN "A"
1237T/-SR	1237
1238T/-SR	1238
1237HTA-T/-SR	1237HTA
1238HTA-T/SR	1238HTA

RoHS REACH

CUSTOMER PRINT

DIMENSIONS: in. [mm]

SCALE:2:1

TOLERANCES:
(unless otherwise specified)
.xxx ±.005 [.127]
.xx ±.01 [.254]
ANGULAR: ±2°

Zierick product-related recommendations are general guidelines and to be used for reference only. Each customer's design, process, and application is different, so it is necessary that customers test our products in their unique applications.

ZIERICK SINCE 1919

REV	DESCRIPTION	DRAWN	CHK'D	APPV'D	DATE

SPEC. DOC.: -

APP. DOC.: -

MATERIAL:
-

FINISH:
-

TITLE:
SMT Universal Fuse Receptacle in 16 mm Tape

DRAWING NUMBER:
1237T/1238T

REVISION:
0

SIZE: A3

SHEET 1 OF 1